Summary in Graph

Exam Summary (GO Classes 2026 | Algorithms | Shortest Paths | Weekly Quiz 3)

Qs. Attempted:	0 (0 + 0)	Correct Marks:	0 (0 + 0)
Correct Attempts:	0 (0 + 0)	Penalty Marks:	0 (0 + 0)
Incorrect Attempts:	0 (0 + 0)	Resultant Marks:	0 (0 + 0)

Total Questions:	15 (10 + 5)
Total Marks:	20 (10 + 10)
Exam Duration:	45 Minutes
Time Taken:	0 Minutes

Individual Question Statistics

Select Metric: Marks Obtained

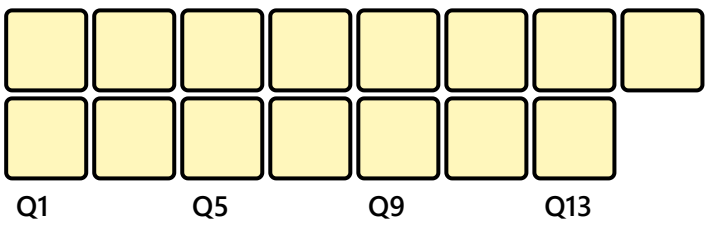

* Average Stats based on first-attempt stats of Top 10% (27) out of 267 users

EXAM RESPONSE EXAM STATS FEEDBACK

Technical

Q #1 Multiple Select Type Award: 1 Penalty: 0 Algorithms

A shortest-path tree (SPT) of a graph $G = (V, E)$ rooted at a source s is a tree in which the path from s to every other vertex is a shortest path in G.

Now, consider a graph $G = (V, E)$ with positive edge weights. We run both Dijkstra's algorithm and the

Bellman-Ford algorithm from the same source s.

Which of the following statements is/are correct?

A. Both algorithms always produce the same shortest-path tree.

B. Both algorithms always produce the same shortest-path distances from the source to every vertex, but the shortest-path trees may be different.

C. Dijkstra's algorithm may give different shortest-path distances compared to Bellman-Ford.

D. There exists only one shortest-path tree for a given graph with positive edge weights.

Your Answer: | Correct Answer: B | Not Attempted | Time taken: 00min 00sec | Discuss

Q #2 | Multiple Choice Type | Award: 1 | Penalty: 0.33 | Algorithms

Consider a weighted directed graph $G = (V, E, w)$ and let X be a shortest $s \to t$ path. Suppose we define a new weight function $w'(e) = 2w(e)$ for every edge $e \in E$. Which of the following is correct?

A. X may no longer be the shortest $s \to t$ path because the edge weights have changed.

B. X will still be the shortest $s \to t$ path since doubling all edge weights preserves the relative ordering of path lengths.

C. X will remain shortest only if the graph has no cycles.

D. X will remain shortest only if all original weights are integers.

Your Answer: | Correct Answer: B | Not Attempted | Time taken: 00min 00sec | Discuss

Q #3 | Multiple Select Type | Award: 1 | Penalty: 0 | Algorithms

Let $\delta(s, v)$ denote the shortest-path distance from source s to vertex v. Consider the following statements. Which of the following is/are TRUE?

A. In a weighted directed graph, Dijkstra's algorithm may relax an edge more than once in a graph with a cycle.

B. In a weighted directed graph $G = (V, E, w)$ with source s, if G has a negative-weight cycle anywhere, then Bellman-Ford necessarily computes an incorrect result for some $\delta(s, v)$.

C. Bellman-Ford works correctly if all negative-weight cycles are unreachable from the source s.

D. Dijkstra's algorithm always produces correct values of $\delta(s, v)$ if the graph has negative-weight edges but no negative-weight cycles.

Your Answer: | Correct Answer: C | Not Attempted | Time taken: 00min 00sec | Discuss

Q #4 | Multiple Choice Type | Award: 1 | Penalty: 0.33 | Algorithms

Consider a directed graph $D(V, E)$.

Each edge $a \in E$ has a value x_a.

We want to check if for every cycle C in the graph,

$$\sum_{a \in C} x_a \geq 0$$

Which algorithm can be used to verify this efficiently?

A. Dijkstra's Algorithm

B. Bellman-Ford Algorithm

C. Depth First Search (DFS)

D. Breadth First Search (BFS)

Your Answer: | Correct Answer: B | Not Attempted | Time taken: 00min 00sec | Discuss

Q #5 | Multiple Select Type | Award: 1 | Penalty: 0 | Algorithms

Suppose a directed graph has no negative cycles. You run the Bellman-Ford algorithm from a source S. Which of the following statements is correct?

A. The shortest-path distances from S are always the same, no matter the order of edge relaxations.

B. The exact shortest-path tree chosen is always the same, no matter the order of edge relaxations.

C. If a vertex can be reached by two different shortest paths of equal length, the chosen path may depend on relaxation order.

D. If each vertex has exactly one shortest path from S, then the shortest-path tree will not depend on the relaxation order.

Your Answer: | Correct Answer: A;C;D | Not Attempted | Time taken: 00min 00sec | Discuss

Q #6 | Multiple Choice Type | Award: 1 | Penalty: 0.33 | Algorithms

Recall the update operation on distances in the Bellman-Ford algorithm:

$$\text{update}(u \to v): \quad \text{dist}[v] = \min(\text{dist}[v], \text{dist}[u] + \ell(u, v))$$

Consider the following graph:

$$S \longrightarrow A \longrightarrow B$$

If all edge weights are positive, which is the shortest sequence of update operations that ensures all distances from S are correctly computed, irrespective of the edge weights?

A. $A \to B, S \to A$

B. $S \to A, A \to B$

C. $S \to A$ only

D. $A \to B, S \to A, S \to B$

Your Answer: | Correct Answer: B | Not Attempted | Time taken: 00min 00sec | Discuss

Q #7 | Multiple Choice Type | Award: 1 | Penalty: 0.33 | Algorithms

The Bellman-Ford algorithm starts from a source s and repeatedly relaxes all edges.
Consider the following two statements:

(1) If the graph G has at most k negative-weight edges (anywhere in the graph), then running BellmanFord for only k iterations is enough to compute all shortest path distances from s.

(2) If every shortest path from s to any vertex uses at most k edges, then running Bellman-Ford for k iterations is enough to compute all shortest path distances from s.

Which of the following is correct?

A. Both (1) and (2) are true

B. (1) is true, (2) is false

C. (1) is false, (2) is true

D. Both (1) and (2) are false

Your Answer: | Correct Answer: C | Not Attempted | Time taken: 00min 00sec | Discuss

Q #8 | Multiple Choice Type | Award: 1 | Penalty: 0.33 | Algorithms

Given an undirected, unweighted, connected graph G , suppose we run a DFS on G starting at some node s . We find that the DFS tree has the property that for any vertex v , the path in the DFS tree from s to v is a shortest (fewest number of edges) path from s to v in G.

Which of the following is necessarily true?

A. G must be a tree.

B. G must be acyclic, but not necessarily connected.

C. G may contain cycles.

D. DFS always produces the shortest paths in any connected graph.

Your Answer: | Correct Answer: A | Not Attempted | Time taken: 00min 00sec | Discuss

Q #9 | Multiple Choice Type | Award: 1 | Penalty: 0.33 | Algorithms

Consider the following statements about shortest paths in graphs:

1. In a strongly connected directed graph with integer edge weights, it is possible that there exist vertices s and t such that no shortest path from s to t exists.

2. In a graph with positive edge weights, if all edge weights are distinct, then the shortest path between any two vertices s and t is unique.

Which of the following is correct?

A. Only statement 1 is true.

B. Only statement 2 is true.

C. Both statements 1 and 2 are true.

D. Both statements 1 and 2 are false.

Your Answer: | Correct Answer: A | Not Attempted | Time taken: 00min 00sec | Discuss

Q #10 | Multiple Choice Type | Award: 1 | Penalty: 0.33 | Algorithms

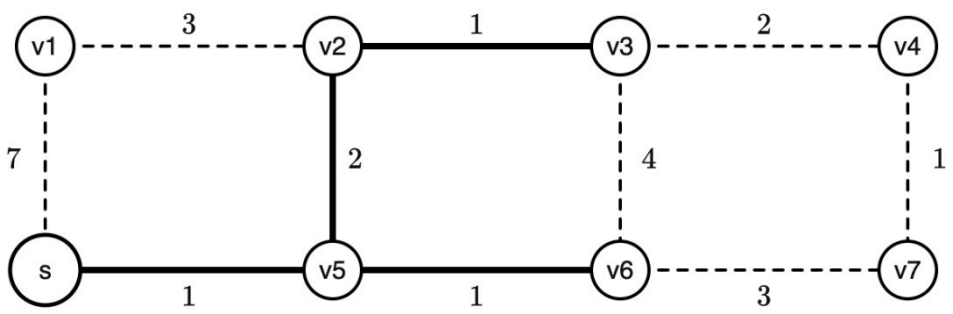

The figure above shows an undirected graph. Dijkstra's algorithm is being run from source s.

Edges already in the current shortest-path tree are drawn **solid**; the remaining edges are dashed.

Which dashed edge will be added *next* to the shortest-path tree by Dijkstra's algorithm?

A. Edge (s, v1) with weight 7
B. Edge (v1, v2) with weight 3
C. Edge (v6, v7) with weight 3
D. Edge (v2, v3) with weight 2

Your Answer: | Correct Answer: C | Not Attempted | Time taken: 00min 00sec | Discuss

Q #11 | Multiple Select Type | Award: 2 | Penalty: 0 | Algorithms

The Bellman-Ford algorithm is used to compute single-source shortest paths in a directed weighted graph $G = (\mathrm{V}, \mathrm{E})$ with integer edge weights.

In each iteration, it relaxes all edges, but the order in which the edges are relaxed may vary from one iteration to another. For example, in one iteration the algorithm may relax edges in the order $(e_1, e_2, e_3, \ldots)$, while in another iteration it may relax them in a completely different order.

Which of the following statements are correct?

A. The correctness of the Bellman-Ford algorithm does not depend on the order of edge relaxations in each iteration.

B. After k iterations, the algorithm guarantees the correct shortest-path distance for all vertices whose shortest path uses at most k edges (anywhere in the graph).

C. Running fewer than $|V| - 1$ iterations may still compute all correct distances if the longest shortest path in the graph uses fewer than $|V| - 1$ edges.

D. The correctness of the Bellman-Ford algorithm depends on the order of edge relaxations in each iteration, i.e., in each iteration, the order of relaxation must be the same as in the first iteration.

Your Answer: | Correct Answer: A;B;C | Not Attempted | Time taken: 00min 00sec | Discuss

Q #12 | Multiple Choice Type | Award: 2 | Penalty: 0.67 | Algorithms

There are n magic portals in a game.

- If you enter portal i, it can send you to portal j.
- Your power gets multiplied by $T[i][j]$.

Thus, if you follow a sequence of portals

$$i_1 \to i_2 \to i_3 \to \cdots \to i_k \to i_1,$$

then the final power is

$$P = T[i_1][i_2] \cdot T[i_2][i_3] \cdot \cdots \cdot T[i_k][i_1].$$

We want to check if there exists a cycle of portals such that the final power $P > 1$.

We want to somehow use the Bellman-Ford algorithm feature of detecting negative cycles here. We will say: if there is a negative cycle, then final power $P > 1$.

For this, we must define the edge weight $w(i, j)$ for each directed edge $(i \to j)$. Which of the following definitions is correct?

A. $w(i, j) = T[i][j]$

B. $w(i, j) = -T[i][j]$

C. $w(i, j) = \log(T[i][j])$

D. $w(i, j) = -\log(T[i][j])$

Your Answer: | Correct Answer: D | Not Attempted | Time taken: 00min 00sec | Discuss

Q #13 | Multiple Select Type | Award: 2 | Penalty: 0 | Algorithms

Consider a weighted directed acyclic graph (DAG) $G = (V, E, w)$.

- Edges leaving the source s may have negative weights.
- All other edges are non-negative.

We want to compute shortest path distances $\delta(s, t)$ for all vertices t.

Which of the following statements is correct?

A. Dijkstra's algorithm may fail since negative weights are present.

B. Dijkstra's algorithm always works in graphs with negative edges as long as there is no negative cycle.

C. Dijkstra's algorithm works correctly in this case.

D. If a negative edge goes beyond the source (i.e., not directly from s), then Dijkstra can fail in this DAG.

Your Answer: | Correct Answer: C;D | Not Attempted | Time taken: 00min 00sec | Discuss

Q #14 | Multiple Choice Type | Award: 2 | Penalty: 0.67 | Algorithms

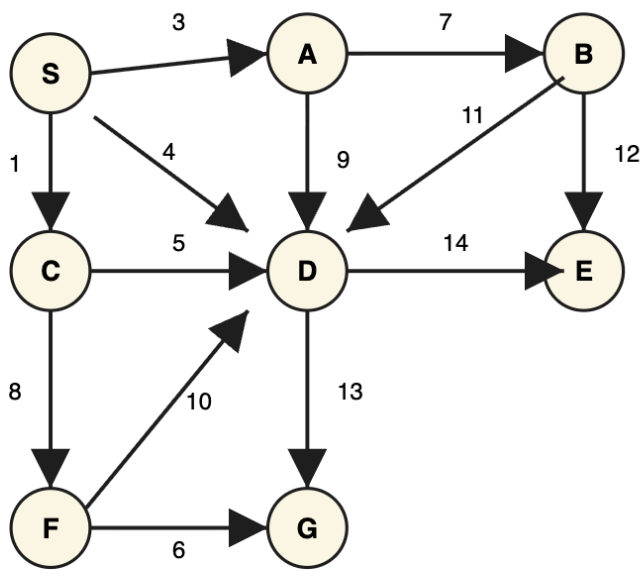

After **S** is *deleted* from the priority queue, which four vertices will be deleted next (in order), and which edge connects each deleted vertex to the tree of shortest paths?

A. C via (S,C), A via (S,A), D via (A,D), F via (C,F)

B. A via (S,A), B via (A,B), C via (S,C), F via (C,F)

C. C via (S,C), A via (S,A), F via (C,F), D via (S,D)

D. C via (S,C), A via (S,A), D via (S,D), F via (C,F)

Your Answer: | Correct Answer: D | Not Attempted | Time taken: 00min 02sec | Discuss

Q #15 | Multiple Choice Type | Award: 2 | Penalty: 0.67 | Algorithms

Consider a directed graph $G = (V, E)$ with non-negative edge weights. Let S be a source vertex.

$S1$. If $S \rightarrow a \rightarrow b$ is a shortest path from S to b, then both subpaths $S \rightarrow a$ and $a \rightarrow b$ are also shortest paths.

$S2$. If $S \rightarrow u$ is a shortest path from S to u, and $u \rightarrow v$ is a shortest path from u to v, then the concatenated path $S \rightarrow u \rightarrow v$ is necessarily a shortest path from S to v.

Which of the following is correct?

A. Both $S1$ and $S2$ are true.

B. $S1$ is true; $S2$ is false.

C. $S1$ is false; $S2$ is true.

D. Both $S1$ and $S2$ are false.

Your Answer: | **Correct Answer: B** | **Not Attempted** | **Time taken: 00min 00sec** | **Discuss**

Copyright & Stuff